SERVICE HINT

A	✓	BG	✓	CY	✓	E	✓	FL	✓	I	✓	LT	✓	MD	✓	NL	✓	S	✓	TR	✓	Date
AL	✓	BIH	✓	CZ	✓	EST	✓	GB	✓	IRL	✓	LV	✓	MK	✓	P	✓	SK	✓	UA	✓	09/09/2013
AND	✓	BY	✓	D	✓	F	✓	GR	✓	IS	✓	M	✓	MNE	✓	PL	✓	SLO	✓	Country Reported		
B	✓	CH	✓	DK	✓	FIN	✓	H	✓	L	✓	MC	✓	N	✓	RO	✓	SRB	✓	USA		

Product Category: **PLASMA TV / PLASMA IDTV**

Subject: **Micro cracks appearing near the edge of the panel after back cover removal and re-fitting.**

Model(s) Affected: **TX-P60ZT60E**
TX-P60ZT65B

Symptom / Cause: Following removing and re-fitting the back cover of the unit, after a period of time micro cracks, bubbles, and/or thin jagged lines appear near the edges of the panel.
The problem can be caused if the back cover is not correctly re-fitted.

Remedy / Method: **Warning:** DO NOT move, transport, carry or perform any type of handling of the TV without the back cover. Make sure the back cover is properly assembled when handling the TV to avoid permanent damage to the PDP panel.

Important: Applicable for all repairs on which the back cover has to be removed and re-assembled

Please see the following pages for examples of the the problem and how to align the back cover

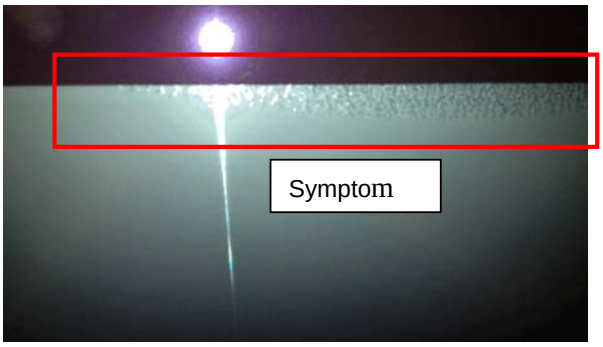

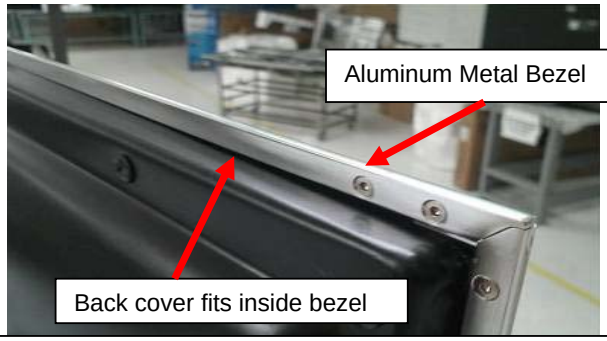

Correct assembly: The back cover fits inside the cavity on the metal bezel.
Note: This condition should be all around the back cover edge.

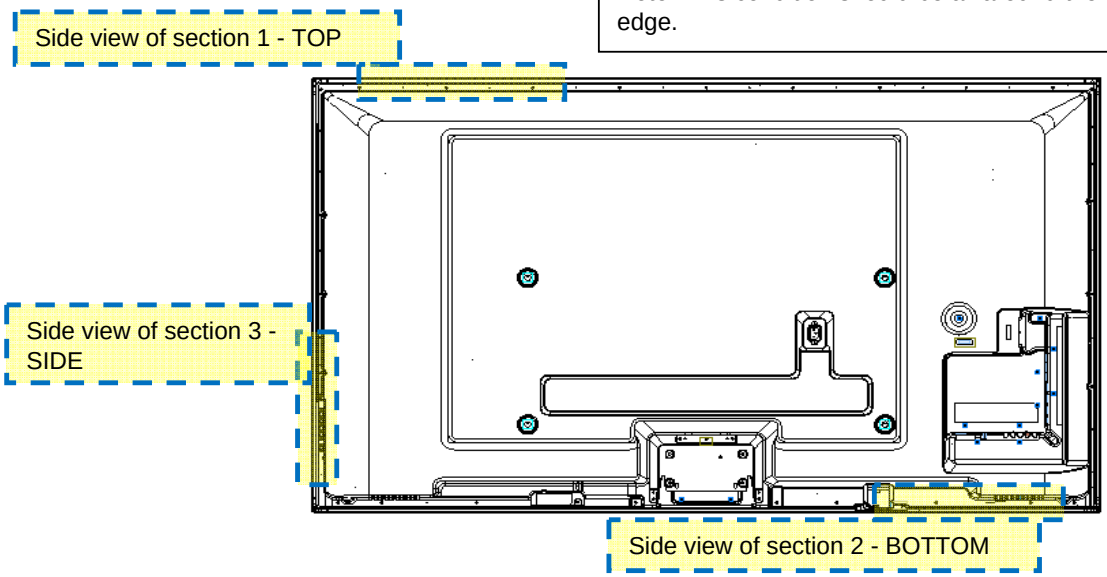

Continued …

SERVICE HINT

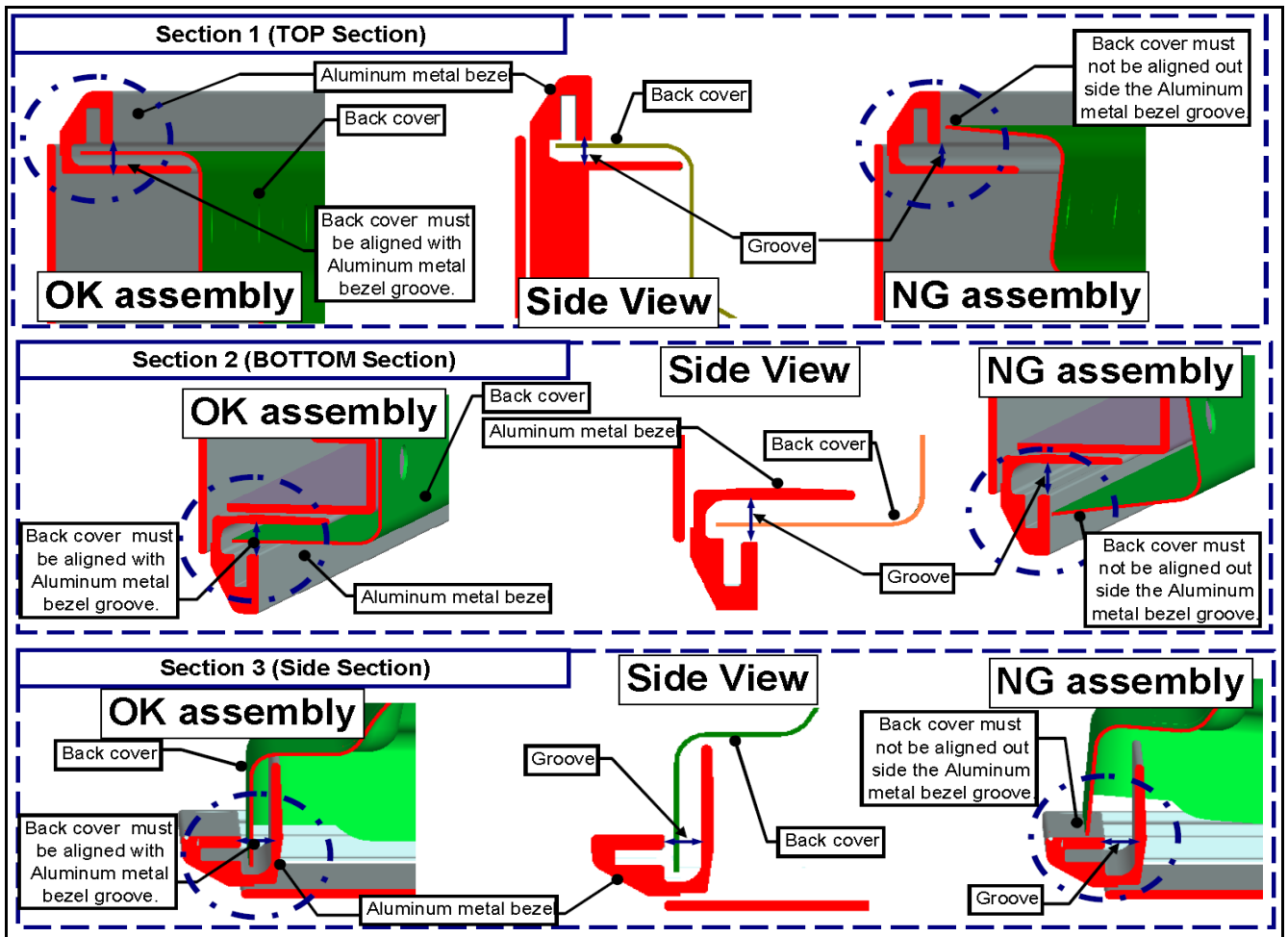

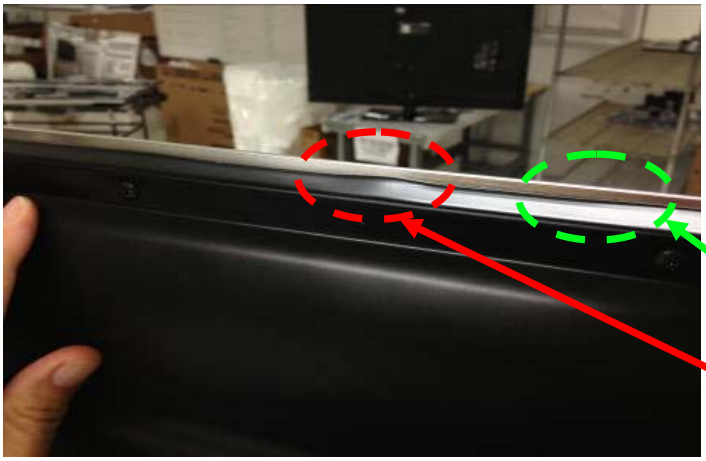

Make sure back cover is correctly assembled / aligned before inserting screws, please review "section 1" for TOP and "section 2" for BOTTOM. NOTE: DO NOT insert screws if the back cover is not correctly assembled / aligned as this may cause damage to panel.

FIT inside - good

FIT outside – NO good (visible bump, hump)

Notes:

- Not following these indications may cause permanent panel damage (glass micro crack). Critical items when assembling back cover:
  1 - DO NOT insert screws to back cover if it is not properly aligned (please refer to sections details).
  2 - DO NOT use material that is out of specification.
  3 - Make sure the back cover perimeter has no deformations, as this may result in bad assembly and possible panel damage.